Worldwide Contacts | www.tyco-fire.com

# Series TY-B, 5.6 K-factor Upright, Pendent, and Recessed Pendent Sprinklers Standard Response, Standard Coverage

**IMPORTANT**

*Refer to Technical Data Sheet TFP2300 for warnings pertaining to regulatory and health information.*

*Always refer to Technical Data Sheet TFP700 for the "INSTALLER WARNING" that provides cautions with respect to handling and installation of sprinkler systems and components. Improper handling and installation can permanently damage a sprinkler system or its components and cause the sprinkler to fail to operate in a fire situation or cause it to operate prematurely.*

Scan the QR code or enter the URL in a web browser to access the most up-to-date electronic version of this document. Data rates may apply.

docs.jci.com/tycofire/tfp152

## General Description

The TYCO Series TY-B, 5.6 K-factor, Upright (TY315) and Pendent (TY325) Sprinklers described in this data sheet are standard response, standard coverage, decorative 5 mm glass bulb type spray sprinklers designed for use in light, ordinary, or extra hazard, commercial occupancies such as banks, hotels, shopping malls, factories, refineries, and chemical plants.

The recessed version of the Series TY-B Pendent Sprinkler, where applicable, is intended for use in areas with a finished ceiling. This recessed pendent sprinkler uses one of the following:

- A two-piece Style 15 Recessed Escutcheon with recessed adjustment up to 5/8 in. (15,9 mm) from the flush pendent position.
- A two-piece Style 20 Recessed Escutcheon with recessed adjustment up to 1/2 in. (12,7 mm) from the flush pendent position.

The adjustment provided by the Recessed Escutcheon reduces the accuracy to which the fixed pipe drops to the sprinklers must be cut.

Intermediate level versions of Series TY-B Sprinklers are described in Technical Data Sheet TFP352. Sprinkler guards and shields are described in Technical Data Sheet TFP780.

**NOTICE**

*The Series TY-B Sprinklers described herein must be installed and maintained in compliance with this document, as well as with the applicable standards of the National Fire Protection Association, in addition to the standards of any other authorities having jurisdiction. Failure to do so may impair the performance of these devices.*

*The owner is responsible for maintaining their fire protection system and devices in proper operating condition. Contact the installing contractor or product manufacturer with any questions.*

## Sprinkler Identification Numbers (SINs)

TY315 . . . . Upright 5.6K, 1/2 in. NPT
TY325 . . . . Pendent 5.6K, 1/2 in. NPT

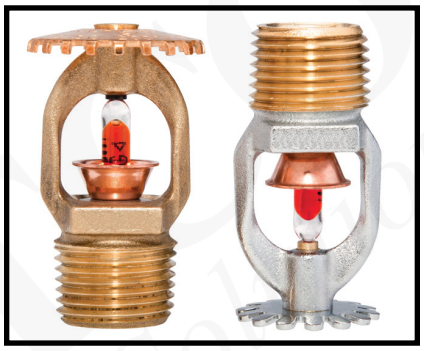

## Technical Data

**Approvals**
See Table A

**Maximum Working Pressure**
175 psi (12.1 bar)
250 psi (17.2 bar)*

* The maximum working pressure of 250 psi (17.2 bar) only applies to the listing by Underwriters Laboratories, Inc. (UL).

**Discharge Coefficient**
K = 5.6 GPM/psi½ (80,6 LPM/bar½)

**Temperature Ratings**
See Table A

**Finishes**
Sprinkler: See Table B

Recessed Escutcheon: White Coated, Black Coated, Chrome Plated, or Brass Plated

**Physical Characteristics**

Frame . . . . . Bronze
Button . . . . . Brass/Copper
Sealing Assembly . . . Stainless Steel w/TEFLON
Bulb . . . . . Glass
Compression Screw . . . . . Bronze
Deflector . . . . . Bronze

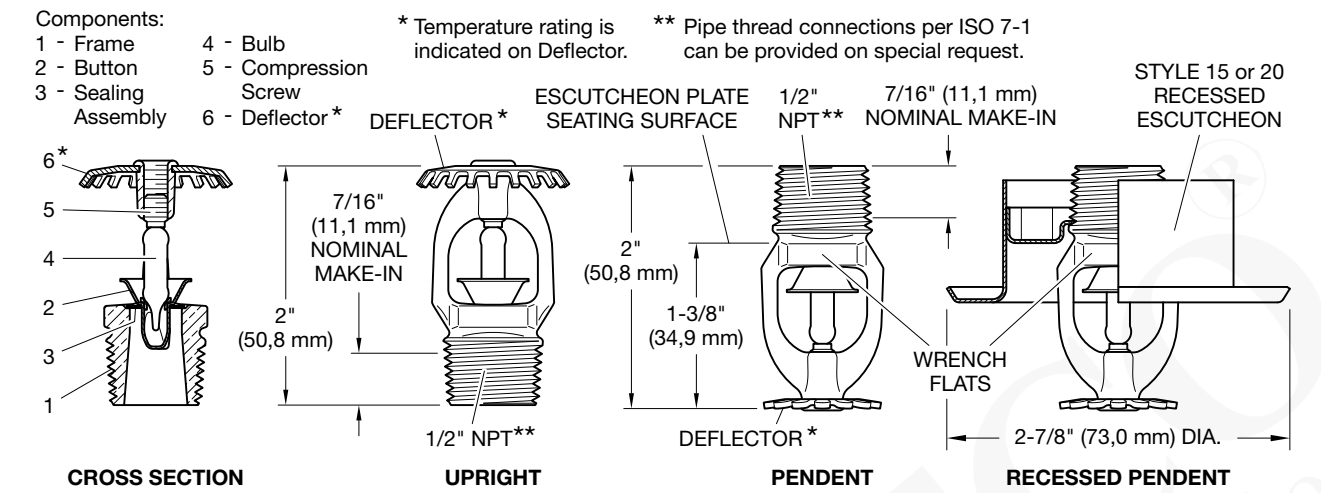


***FIGURE 1***
***SERIES TY-B UPRIGHT (TY315) AND PENDENT (TY325) SPRINKLERS***
***5.6 K-FACTOR, 1/2 INCH NPT, STANDARD RESPONSE***

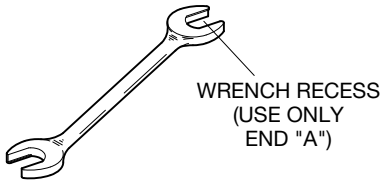


***FIGURE 2***
***W-TYPE 6***
***SPRINKLER WRENCH***

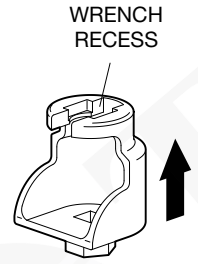


***FIGURE 3***
***W-TYPE 7 RECESSED***
***SPRINKLER WRENCH***

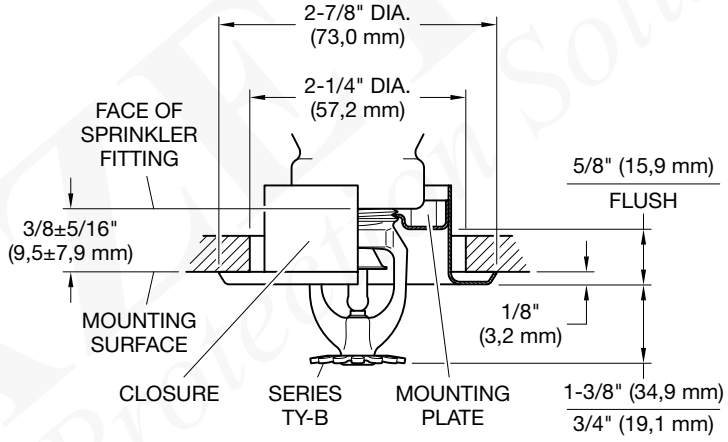


***FIGURE 4***
***SERIES TY-B RECESSED PENDENT SPRINKLER ASSEMBLY (TY325)***
***WITH TWO-PIECE 5/8 INCH TOTAL ADJUSTMENT STYLE 15***
***RECESSED ESCUTCHEON***

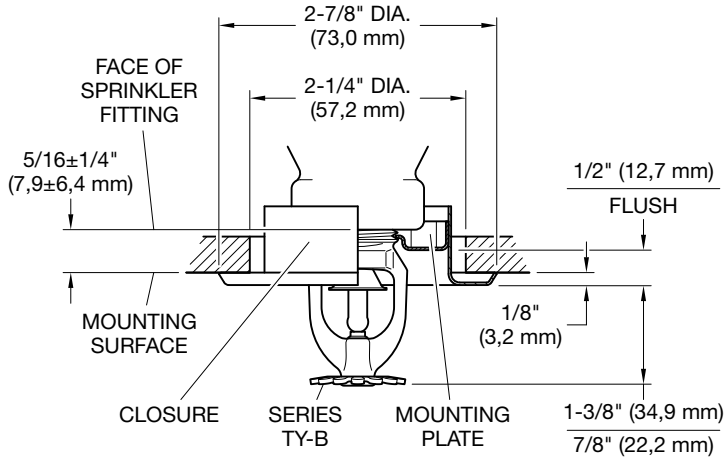


***FIGURE 5***
***SERIES TY-B RECESSED PENDENT SPRINKLER ASSEMBLY (TY325)***
***WITH TWO-PIECE 1/2 INCH TOTAL ADJUSTMENT STYLE 20***
***RECESSED ESCUTCHEON***

# *Operation*

The glass bulb contains a fluid which expands when exposed to heat. When the rated temperature is reached, the fluid expands sufficiently to shatter the glass bulb, allowing the sprinkler to activate and water to flow.

| K-factor | Sprinkler Type | Temperature Rating | Bulb Liquid Color | Sprinkler Finish[7] | | |
|---|---|---|---|---|---|---|
| | | | | Natural Brass | Chrome Plated | Polyester[b] |
| 5.6 1/2 in. NPT | Upright TY315 and Pendent TY325 See Figure 1 | 135°F (57°C) | Orange | 1, 2, 3, 4, 5, 6 | | |
| | | 155°F (68°C) | Red | | | |
| | | 175°F (79°C) | Yellow | | | |
| | | 200°F (93°C) | Green | | | |
| | | 286°F (141°C) | Blue | | | |
| | | 360°F (182°C) | Mauve | 1, 2, 4, 5, 6 | | |
| | Recessed Pendent TY325[a] See Figures 4 and 5 | 135°F (57°C) | Orange | 1, 2, 3, 4 | | |
| | | 155°F (68°C) | Red | | | |
| | | 175°F (79°C) | Yellow | | | |
| | | 200°F (93°C) | Green | | | |
| | | 286°F (141°C) | Blue | 1, 2 | | |

**NOTES:**
1. Listed by Underwriters Laboratories, Inc. (UL)
2. Listed by Underwriters Laboratories, Inc. for use in Canada (C-UL)
3. Approved by FM Global (FM Approvals)
4. Approved by the Loss Prevention Certification Board (LPCB Ref. No. 007k/03)
5. VdS Approved; For details contact Johnson Controls, Enschede, Netherlands, Tel. 31-53-428-4444 / Fax 31-53-428-3377
6. Approved by the Loss Prevention Certification Board (LPCB Ref. No. 094a/05)
7. Where polyester coated sprinklers are noted to be UL and C-UL Listed, the sprinklers are UL and C-UL Listed as corrosion-resistant sprinklers

a. Installed with Style 15 (1/2 in. NPT) 5/8 in. total adjustment recessed escutcheon, as applicable
b. Frame and deflector only

***TABLE A***
***SERIES TY-B UPRIGHT AND PENDENT SPRINKLERS***
***LABORATORY LISTINGS AND APPROVALS***

# Design Criteria

The TYCO Series TY-B, 5.6 K-factor, Upright (TY315) and Pendent (TY325) Sprinklers are intended for fire protection systems designed in accordance with the standard installation rules recognized by the applicable Listing or Approval agency. For example, the UL Listing is based on the requirements of NFPA 13, and the FM Approval is based on the requirements of the FM Loss Prevention Data Sheets. Only the Style 15 or Style 20 Recessed Escutcheon, as applicable, is to be used for recessed pendent installations.

# Installation

The TYCO Series TY-B, 5.6 K-factor, Upright (TY315) and Pendent (TY325) Sprinklers must be installed in accordance with this section.

**General Instructions**
Do not install any bulb type sprinkler if the bulb is cracked or there is a loss of liquid from the bulb. With the sprinkler held horizontally, a small air bubble should be present. The diameter of the air bubble is approximately 1/16 in. (1,6 mm) for the 135°F (57°C) to 3/32 in. (2,4 mm) for the 360°F (182°C) temperature ratings.

A leak-tight 1/2 in. NPT sprinkler joint should be obtained by applying a minimum-to-maximum torque of 7 to 14 lb-ft (9,5 to 19,0 N·m). Higher levels of torque may distort the sprinkler inlet and cause leakage or impairment of the sprinkler.

Do not attempt to compensate for insufficient adjustment in the escutcheon plate by under- or over-tightening the sprinkler. Readjust the position of the sprinkler fitting to suit.

**Upright and Pendent Sprinklers**
The Series TY-B Upright and Pendent Sprinklers must be installed in accordance with the following instructions.

**Step 1.** Install pendent sprinklers in the pendent position; install upright sprinklers in the upright position.

**Step 2.** With pipe-thread sealant applied to the pipe threads, hand-tighten the sprinkler into the sprinkler fitting.

**Step 3.** Tighten the sprinkler into the sprinkler fitting using only the W-Type 6 Sprinkler Wrench as shown in Figure 2. Apply the W-Type 6 Sprinkler Wrench to the wrench flats as shown in Figure 1. Torque the sprinklers 7 to 14 lb-ft (9,5 to 19,0 N·m).

**Recessed Pendent Sprinklers**
The Series TY-B Recessed Pendent Sprinklers must be installed in accordance with the following instructions. See Figures 4 and 5.

**Step A.** After installing the Style 15 or Style 20 Mounting Plate, as applicable, over the sprinkler threads and with pipe-thread sealant applied to the pipe threads, hand-tighten the sprinkler into the sprinkler fitting.

**Step B.** Tighten the sprinkler into the sprinkler fitting using only the W-Type 7 Recessed Sprinkler Wrench (Figure 3). Apply the W-Type 7 Recessed Sprinkler Wrench to the sprinkler wrench flats as shown in Figure 1. Torque the sprinklers 7 to 14 lb-ft (9,5 to 19,0 N·m).

**Step C.** After the ceiling is installed or the finish coat is applied, slide on the Style 15 or Style 20 Closure over the Series TY-B Sprinkler and push the Closure over the Mounting Plate until its flange contacts the ceiling.

P/N 77XXXXXXX

| | | SIN |
|---|---|---|
| 570 | 5.6K UPRIGHT 1/2 in. NPT | TY315 |
| 571 | 5.6K PENDENT 1/2 in. NPT | TY325 |

| | SPRINKLER FINISH |
|---|---|
| 1 | NATURAL BRASS[a] |
| 3 | PURE WHITE (RAL9010)[b] POLYESTER |
| 4 | SIGNAL WHITE (RAL9003) POLYESTER |
| 5 | JET BLACK (RAL9005) POLYSTER |
| 9 | CHROME PLATED |

| | TEMPERATURE RATING |
|---|---|
| 135 | 135°F (57°C) |
| 155 | 155°F (68°C) |
| 175 | 175°F (79°C) |

| | TEMPERATURE RATING |
|---|---|
| 200 | 200°F (93°C) |
| 286 | 286°F (141°C) |
| 360 | 360°F (182°C) |

**Notes:**
a. Not available for TY325 Pendent in 286°F (141°C) temperature rating
b. Eastern Hemisphere sales only

***TABLE B***
***SERIES TY-B UPRIGHT AND PENDENT SPRINKLERS***
***PART NUMBER SELECTION***

# Care and Maintenance

The TYCO Series TY-B, 5.6 K-factor, Upright (TY315) and Pendent (TY325) Sprinklers must be maintained and serviced in accordance with this section.

Before closing a fire protection system main control valve for maintenance work on the fire protection system that it controls, obtain permission to shut down the affected fire protection system from the proper authorities and notify all personnel who may be affected by this action.

Absence of the outer piece of an escutcheon, which is used to cover a clearance hole, can delay sprinkler operation in a fire situation.

The owner must assure that the sprinklers are not used for hanging any objects and that the sprinklers are only cleaned by means of gently dusting with a feather duster; otherwise, non-operation in the event of a fire or inadvertent operation may result.

Sprinklers which are found to be leaking or exhibiting visible signs of corrosion must be replaced.

Automatic sprinklers must never be painted, plated, coated, or otherwise altered after leaving the factory. Modified sprinklers must be replaced. Sprinklers that have been exposed to corrosive products of combustion, but have not operated, should be replaced if they cannot be completely cleaned by wiping the sprinkler with a cloth or by brushing it with a soft bristle brush.

Care must be exercised to avoid damage to the sprinklers before, during, and after installation. Sprinklers damaged by dropping, striking, wrench twist/slippage, or the like, must be replaced. Also, replace any sprinkler that has a cracked bulb or that has lost liquid from its bulb. See Installation Section.

Thereafter, annual inspections based on NFPA 25 are required; however, instead of inspecting from the floor level, a random sampling of close-up visual inspections should be made.

The owner is responsible for the inspection, testing, and maintenance of their fire protection system and devices in compliance with this document, as well as with the applicable standards of the National Fire Protection Association such as NFPA 25, in addition to the standards of any other authorities having jurisdiction. Contact the installing contractor or product manufacturer with any questions.

Automatic sprinklers are recommended to be inspected, tested, and maintained by a qualified Inspection Service in accordance with local requirements and/or national codes.

# Limited Warranty

For warranty terms and conditions, visit www.tyco-fire.com.

# Ordering Procedure

Contact your local distributor for availability. When placing an order, indicate the full product name and Part Number (P/N).

**Sprinkler Assemblies with NPT Thread Connections**
Specify: Series TY-B Upright or Pendent (specify) Sprinkler, SIN (specify), K=5.6, Standard Response, (specify) temperature rating, (specify) finish, P/N (specify, refer to Table B)

**Recessed Escutcheon**
Specify: Style 15 Recessed Escutcheon with (specify*) finish, P/N (specify*)

Specify: Style 20 Recessed Escutcheon with (specify*) finish, P/N (specify*)

* Refer to Technical Data Sheet TFP770

**Sprinkler Wrench**
Specify: W-Type 6 Sprinkler Wrench, P/N 560006387

Specify: W-Type 7 Sprinkler Wrench, P/N 568504001

**1467 Elmwood Avenue, Cranston, RI 02910 | Telephone +1-401-781-8220**

**© 2024 Johnson Controls. All rights reserved. All specifications and other information shown were current as of document revision date and are subject to change without notice.**

NATIONAL FIRE PROTECTION ASSOCIATION and NFPA are registered trademarks of National Fire Protection Association;
TEFLON is a trademark of The Chemours Company FC, LLC

Johnson Controls